Licensed to Kuo, Li-Hung/TWi Pharmaceuticals Inc.: Copying and Distribution Prohibited.

PDA
Parenteral Drug Association

Technical Report No. 73-2

Application of Medical Device Regulation Annex I Requirements for Staked Needle Syringes

Licensed to Kuo, Li-Hung/TWi Pharmaceuticals Inc.: Copying and Distribution Prohibited.

Application of Medical Device Regulation Annex I Requirements for Staked Needle Syringes

Authors

Fabrizio Bacelle, Stevanato Group

Bettine Boltres, PhD, West Pharmaceutical Services

Alfred Breunig, Nipro PharmaPackaging International

Rakhi Dalal, PhD, U.S. Food and Drug Administration

Wendy Durand, PharmD, Aptar Pharma

Andreas Emmendoerffer, MD, PhD, F. Hoffmann-La Roche Ltd.

Stephanie Goebel, Beyond Conception GmbH

Elly Gysels, PhD, Sensile Medical AG

Tibor Hlobik, West Pharmaceutical Services Inc.

Vikas Jaitely, PhD, Merck Group

Ankica Jakovljevic, PharmD, Stevanato Group

Mayk Kresse, PhD, Bayer Pharma AG

Andrea Salmaso, PharmD, Stevanato Group

Tabassam Sharif, Datwyler Pharma Packaging

Gabriele Widerstein, Boehringer Ingelheim

Urs Widmer, confinis AG

Daniele Zuccato, SCHOTT Pharma

Contributors

Mark Di Cioccio, Team Consulting, Ltd.

Desmon Dizon, Genentech

Peter Dorski, Johnson & Johnson Innovative Medicine

Stephanie Horn, PhD, F. Hoffmann-La Roche, Ltd.

Chris Hurlstone, Team Consulting, Ltd.

Christoph Joosten, PhD, F. Hoffmann-La Roche, Ltd.

Tilman Roedle and Associates, Vetter Pharma

Federica Rusmini, Johnson & Johnson Innovation Medicine

Larry Wallman, Genentech

Alastair Willoughby, Team Consulting, Ltd.

Licensed to Kuo, Li-Hung/TWi Pharmaceuticals Inc.: Copying and Distribution Prohibited.

Application of Medical Device Regulation Annex I Requirements for Staked Needle Syringes

Technical Report No. 73-2

ISBN: 978-1-945584-44-2

© 2024 Parenteral Drug Association, Inc.
All rights reserved.

PDA®
Parenteral Drug Association

Licensed to Kuo, Li-Hung/TWi Pharmaceuticals Inc.: Copying and Distribution Prohibited.

Table of Contents

1.0 INTRODUCTION 1

1.1 Purpose 1
1.2 Scope 1

2.0 GLOSSARY AND ABBREVIATIONS 3

2.1 Glossary 3
2.2 Abbreviations 5

3.0 REGULATORY BACKGROUND 5

4.0 CONTENT OF SUBMISSION FILE TO NOTIFIED BODIES 6

4.1 Product Description 7
4.2 Device 7
4.3 Device Function 9
4.4 Components 10
4.5 Materials 12
4.6 Packaging 13
4.7 Product Manufacturing 14
4.7.1 Components and Subassembly Manufacturing 14
4.7.2 Drug-Device Combination Manufacturing (Filling, Assembly, and Packaging) 14
4.7.3 Storage and Transport 15

5.0 APPLICABLE GSPRS AND SUPPORTIVE DOCUMENTS 15

5.1 Supportive Documents Needed to Address GSPRs 15
5.2 Chapter I — Risk Management 29
5.3 Plunger Rod, Rigid Part of the Rigid Needle Shield and Finger Flange Extension/Backstop 29
5.4 Applicability of Requirements regarding Design and Manufacture 30
5.5 Nonapplicable GSPRs and Their Justifications 31

6.0 REFERENCES 33

FIGURES AND TABLES INDEX

Table 1.2-1 Items In and Out of Scope of TR-73-2, by Category 2
Table 4.1-1 Example of MAA Information Summary on the Medicinal Product 7
Figure 4.2-1 Schematic Overview of the Drug and the Device with its Components 7
Figure 4.2-2 Syringe Subassembly Ready for Filling 8
Table 4.2-1 Example of Identification of "Virtual" Device 8
Table 4.2-2 Example of Device Attributes 9
Table 4.2-3 Example of Device Intended Use and Intended User Population 9
Figure 4.4-1 Components of a Syringe 10
Table 4.4-1 Example of Component Information 11
Table 4.4-2 Example of Functional Unit Information 11
Table 4.5-1 Example of Material Information 12
Table 4.5-2 Example of Materials Relevant in the Context of GSPR 10 13
Table 4.6-1 Example of Overview of Packaging Materials 13
Table 4.7.1-1 Example of Overview of Device Part Manufacturing 14
Table 4.7.2-1 Example of Overview of DDC Manufacturing 15
Table 5.1-1 Supportive Documents Suggested to Address Relevant GSPRs 17
Table 5.3-1 Examples of Supportive Documents for Plunger Rod, Rigid Part of RNS and, if used, Finger Flange Extension/Backstop 30
Figure 5.4-1 Overview of Subrequirements of GSPRs 10, 11, 13, 14, and 15 Applicable to Prefilled Syringes 31
Table 5.5-1 Nonapplicable GSPRs and Suggested Justifications 32

Licensed to Kuo, Li-Hung/TWi Pharmaceuticals Inc.: Copying and Distribution Prohibited.

1.0 Introduction

The European Union regulation (EU) 2017/745 on medical devices, referred to as MDR, introduces new requirements for manufacturers of medical devices. These new requirements, according to MDR Articles 1(8) and 1(9), subparagraphs 2, also apply to pharmaceutical companies developing and manufacturing combinations of medicinal products and medical devices, including prefilled syringes (PFS), both integral and single integral products. The device part of these PFS must comply with the rules outlined in MDR Annex I: General Safety and Performance Requirements (GSPRs). Evidence of compliance, as described in Article 117, must be provided by requesting an opinion from a Notified Body (NB) appropriately accredited for the issuance of such an opinion ***(1)*** (See **Section 3.0**).

PDA *Technical Report No. 73-2: Application of Medical Device Regulation Annex I Requirements for Staked Needle Syringes* represents the current state of knowledge as to its application. As this is a new process based on a new regulatory requirement, expectations of the NBs and competent authorities may diverge as the process evolves. Ultimately, the responsibility for the entire content of the submission file that is reviewed by the NB lies with the applicant. Accordingly, the intended users of TR-73-2 are applicants, i.e., pharmaceutical companies, their suppliers, and other interested parties.

1.1 Purpose

As an addendum to PDA *Technical Report No. 73: Prefilled Syringe User Requirements for Biotechnology Applications,* this technical report provides recommendations on preparing the required documentation of the device part of the PFS to facilitate obtaining an NB opinion.

Table 5.1-1 in **Section 5.0** provides GSPR guidance on the syringe components, syringe subassembly ready for filling, and the device part (see **Figure 4.2-1**). It systematically recommends the amount and depth of information needed for each relevant GSPR to support pharmaceutical companies in assembling the submission file to the NBs.

Section 4.0 provides information on documents that provide guidance on completing the NB submission file. Following *MDR Annex II: Technical Documentation* to complete the submission file for the NBs is recommended; individual sections can be written in more or less detail, at the discretion of the submitting applicant ***(2)***. Additional guidance can be found in the Team-NB position papers on documentation requirements and on best practices for the submission of technical documentation ***(2,3)***. TR-73-2 also follows the same structure as the submission file.

1.2 Scope

While the scope of PDA TR-73 applies only to 1 ml long glass PFS for biotechnology application, TR-73-2 applies to PFS of glass and polymer of different volumes within the definition of MDR Article 1(9), subparagraph 2. The scope of TR-73-2 is not exclusive for biotechnology applications.

The device part, including its corresponding components and materials, are in scope as they will be evaluated by the NBs, but the medicinal product (drug) is not.

Figure 4.2-1 provides a schematic overview of the drug and the device parts of a PFS and its components**;** a backstop can be added if needed.

© 2024 Parenteral Drug Association, Inc.

Licensed to Kuo, Li-Hung/TWi Pharmaceuticals Inc.: Copying and Distribution Prohibited.

Table 1.2-1 delineates the items considered in and out of scope of TR-73-2.

Table 1.2-1 Items In and Out of Scope of TR-73-2, by Category

Category	In Scope	Out of Scope
Syringe Type	Staked needle	Luer lock, luer cone, dual chamber[1]
Dosing	Fixed dose	Variable dose (with or without measuring function)
Material of Construction	Glass Polymer	
Additional Components/Features	Backstop or finger-flange extension (Rigid) needle shield Plunger rod[2]	Autoinjectors Sharps injury-protection system (needle safety system) Immediate syringe label
Packaging		Packaging, such as blister, folding box or carton labels, paper tray, leaflets, or sterile barrier
Regulatory Requirements	GSPRs in Annex I of Regulation (EU) 2017/45	Non-EU regulatory frameworks
Application	Injectable medicinal products, as defined in Article 1(2), intended for intramuscular, intravenous, or subcutaneous injection[3]	Veterinary products[4] ATMPs as defined under Article 2(1)(d) of Regulation (EC) No 1394/2007[4,5] Intravitreal[6]

1 Dual-chamber PFS are out of scope because they are not typically produced in a staked needle configuration.

2 Additional components and features are described in **Section 5.3**.

3 Directive 2001/83/EC of the European Parliament and of the Council of 6 November 2001 on the Community Code Relating to Medicinal Products for Human Use (MPD) ***(4)***.

4 Veterinary medicines and advanced therapy medicinal products (ATMP) are out of scope because they are out of the scope of the MDR.

5 Regulation (EC) No 1394/2007 of the European Parliament and of the Council of 13 November 2007 on advanced therapy medicinal products

6 Intravitreal PFS are out of scope because they are not typically produced in a staked needle configuration.

The components listed in **Table 1.2-1** under the category of "Packaging" are out of scope of TR-73-2 because the requirements are covered by *Directive 2001/83/EC*, which is the leading legal framework. However, in terms of the individual product-specific setup, related evidence (e.g., shipping studies, risk- and/or user-related labeling, if it affects the device part) should be considered as part of the MDR Annex I evidence submitted to the NB. (See **Section 5.5.**)

Further design variants similar to the components described in this document are technically out of scope; nonetheless, this technical report can be used as a guidance to address them.

 © 2024 Parenteral Drug Association, Inc.

Licensed to Kuo, Li-Hung/TWi Pharmaceuticals Inc.: Copying and Distribution Prohibited.

2.0 Glossary and Abbreviations

2.1 Glossary

Definitions have been provided to help clarify the concepts discussed in this technical report. While some of the definitions vary among companies, the definitions described below are consistent for use within this technical report. Where a definition is based on another published source, the source is cited. Only definitions that are either not mentioned in TR-73 or not taken from the TR-73 glossary are mentioned here.

As there is no agreed-upon EU-wide term for a product combining a medicinal product and a medical device part, such as "prefillable syringes ready for filling," this document uses the term "drug-device combination (DDC)" to refer to the final PFS system.

Applicant

The commercial entity responsible for the marketing authorisation application or post-approval application in the EU ***(5)***.

Competent Authorities (National)

A medicines regulatory authority in a European Union Member State ***(6)***.

Container Closure Integrity

Container closure integrity (CCI) is the ability of a container closure system to maintain the sterility and product quality of sterile final pharmaceutical, biological, and vaccine products throughout their shelf life.

Device Part

A device that fulfills the definition of a medical device, as defined in the relevant EU legal framework, and is intended to be placed on the EU market or made available on the EU market. This also applies to part of a device that fulfills the definition of Article 2(1).

In the context of this document, the device part comprises the syringe subassembly ready for filling plus the plunger rod, needle shield, and finger flange extension.

Direct Contact

Medical device or medical device component that comes into physical contact with body tissue ***(7)***.

Drug-Device Combination (DDC) Product

Medicinal products where the medical device and/or device part and the medicinal product form an integral product that is not reusable (hereafter called integral) and where the action of the medicinal product is principal ***(1)***.

There are two types of DDCs according to MDR Articles 1(8) and 1(9):

- Any device which, when placed on the market or put into service, incorporates, as an integral part, a substance which, if used separately, would be considered to be a medicinal product… [and] if the action of that substance is principal and not ancillary to that of the device, the integral product will be regulated as a medicinal product (Article 1(8)).

- If the [medical] device intended to administer a medicinal product and the medicinal product is placed on the market in such a way that they form a single integral product which is intended exclusively for use in the given combination and which is not reusable, that single integral product shall be governed by Directive 2001/83/EC or Regulation (EC) No 726/2004, as applicable (Article 1(9), subparagraph 2) ***(8)***.

Indirect Contact

Medical device or medical device component through which a fluid or gas passes, prior to the fluid or gas coming into physical contact with body tissue (in this case the medical device or medical device component itself does not physically contact body tissue) ***(7)***.

Market Authorization Holder

The company or other legal entity that has the authorization or aims to receive it, to market a medicine in one, several, or all European Union Member States (adapted from *EMA Glossary of Regulatory Terms*) ***(6)***.

Nanomaterial

A natural, incidental or manufactured material containing particles in an unbound state or as an aggregate or as an agglomerate and where, for 50 % or more of the particles in the number size distribution, one or more external dimensions is in the size range 1-100 nm; Fullerenes,

© 2024 Parenteral Drug Association, Inc.

Licensed to Kuo, Li-Hung/TWi Pharmaceuticals Inc.: Copying and Distribution Prohibited.

graphene flakes and single-wall carbon nanotubes with one or more external dimensions below 1 nm shall also be deemed to be nanomaterials (Article 2(18)) ***(1)***.

Needle Safety Device
A safety feature or mechanism that effectively reduces the risk of an exposure incident (e.g., accidental needlestick) ***(9)***; sharps injuries protection system.

Needle Shield, Rigid Needle Shield
Elastomeric syringe closure, which seals the front end of staked needle syringe, designed to protect the needle tip/bevel from damage and allows sterilization of the syringe. The elastomeric syringe closure covered by a rigid housing is called rigid needle shield ***(10)***.

Notified Body
Conformity assessment body designated in accordance with Regulation (EU) 2017/745 (Article 2(42)) ***(1)***.

Processing Aids
A substance (or mixture of substances) that is used to facilitate manufacturability, processing, transport, or storage of a material or component. It may assist in, for example, reducing energy/time/resources required to aid the process, increasing production, and cleaning efficiency and machinability. Processing aids do not contribute to the intended attributes of the finished component and do not belong to the intentionally added ingredients of the formulation (e.g., silicone oil, mold release, and anti-tack agents). Processing aids may be removed during the manufacturing process or, depending on the process clearance capability, may remain as low-level residuals in the finished component.

Processing Residues
Residues of processing aids in or on the final drug-device combination.

Quality Certificate
Certificate of Analysis, Certificate of Compliance, or equivalent document providing evidence of compliance with product specifications.

Risk Evaluation
Process of comparing the estimated risk against given risk criteria to determine the acceptability of the risk ***(11)***.

Risk Management
Systematic application of management policies, procedures and practices to the tasks of analyzing, evaluating, controlling and monitoring risks ***(11)***.

Single-Dose Container
A container that holds a quantity of the preparation intended for total or partial use on one occasion only (Ph. Eur. 3.2) ***(12)***.

Staked Needle Syringe
Syringe with a needle integrated into the barrel; the fixation can be done by insert molding, gluing or other bonding methods ***(13)***.

State of the Art (SOTA), Generally Acknowledged (GA)
Developed stage of current technical capability and/or accepted clinical practice in regard to products, processes and patient management, based on the relevant consolidated findings of science, technology and experience ***(14)***.

Surgically Invasive
Surgically invasive device means (a) an invasive device which penetrates inside the body through the surface of the body, including through mucous membranes of body orifices with the aid or in the context of a surgical operation; and (b) a device which produces penetration other than through a body orifice (Annex VIII, Chapt. 1, 2.2) ***(1)***.

Syringe Barrel
Cylindrical glass or polymer body with front end and finger flange ***(10, 13)***.

Syringe Components
Can be a glass or polymer syringe barrel with or without lubrication, a needle with lubrication and a needle shield (soft or rigid), plunger (also plunger stopper) with lubrication, coating and/or lamination, plunger rod and, if needed, a backstop.

Syringe Subassembly Ready for Filling (also Prefillable Subassembled Syringe)
Subassembly consisting of a glass or polymer syringe barrel, a needle and a needle shield (soft or rigid) that has been washed and sterilized; considered as starting material for the filling and assembling process of a prefilled syringe ***(10)***.

© 2024 Parenteral Drug Association, Inc.

Licensed to Kuo, Li-Hung/TWi Pharmaceuticals Inc.: Copying and Distribution Prohibited.

2.2 Abbreviations

ASTM
American Society for Testing and Materials

ATMP
Advanced Therapy Medicinal Product

CCI
Container Closure Integrity

CMR
Carcinogenic, Mutagenic, or Toxic to Reproduction

DDC
Drug-Device Combination Product

ED
Endocrine-Disrupting

EMA
European Medicines Agency

GSPR
General Safety and Performance Requirement

MAA
Marketing Authorization Application

MDR
Medical Device Regulation

NB
Notified body

NBOp
Notified Body Opinion

NS
Needle Shield

PFS
Prefilled Syringe

RM
Risk Management

RMS
Risk Management System

RNS
Rigid Needle Shield

SmPC
Summary of Product Characteristics

TSE/BSE
Transmissible spongiform encephalopathies/
Bovine spongiform encephalopathy

3.0 Regulatory Background

The European Union Regulation (EU) 2017/745 (MDR) came into force on 26 May 2021, replacing Council Directive 93/42/EEC concerning medical devices. Regulatory changes and updates affect requirements for staked needle PFS that significantly impact global marketing authorization applicants and holders who have, or want to place, products on the EU market.

According to MDR Article 1(9), subparagraph 1, a device that is intended to administer a medicinal product is governed by the MDR, as opposed to Directive 2001/83/EC relating to medicinal products. MDR Article 1(9), subparagraph 2 states:

> However, if a device intended to administer a medicinal product and the medicinal product are placed on the market in such a way that they form a single integral product which is intended exclusively for use in the given combination and which is not reusable, that single integral product shall be governed by Directive 2001/83/EC or Regulation (EC) No 726/2004, as applicable ***(1)***.

© 2024 Parenteral Drug Association, Inc.

Licensed to Kuo, Li-Hung/TWi Pharmaceuticals Inc.: Copying and Distribution Prohibited.

Moreover, the device part of this single integral (DDC) product (e.g., final prefilled staked needle syringe) must comply with the relevant GSPRs established in MDR Annex I.

In order to evaluate whether GSPR compliance can be self-assessed or if it requires a Notified Body Opinion (NBOp), the device part of the PFS must be classified as a "virtual device." MDR Annex VIII lays out the classification rules that determine the level of information and the involvement of a NB that would be required. Annex VIII, Rule 6 refers to surgically invasive devices intended for transient use. Because the device part of a prefilled syringe falls under this description, it is classified as Class IIa or higher, thus requiring a NB to be involved, as stated in MDR Article 117. That Article amends Directive 2001/83/EC Annex I, Section 3.2, point 12 to state that, if the application dossier to the competent authorities does not already include the results of the conformity assessment of the device, a NBOp must be provided.

The generation of the required data is a joint effort between the manufacturers of the components, device part, and device and the pharmaceutical company. As the pharmaceutical company (the applicant) is filing both for the NBOp and the marketing authorization, it is ultimately responsible for ensuring that all content and data are "attributable, legible, contemporaneous, original and accurate (ALCOA)" ***(15)***. The European Medicines Agency (EMA) provides a comprehensive website, updated regularly, with questions and answers on good manufacturing practices (GMP) and data integrity ***(8)***.

In summary, applicants who want to place staked needle PFS on the EU market must involve a NB in the assessment of compliance with MDR Annex I GSPRs. The NBOp obtained must be included in the application dossier to the national competent authorities or the EMA.

4.0 Content of Submission File to Notified Bodies

To complete the submission file for the NBs, following MDR Annex II is recommended. It is structured into five sections: "Device description and specification," "Design and Manufacturing Information," "General Safety and Performance Requirements," "Benefit-Risk Analysis and Risk Management," and "Product Verification and Validation." Individual sections of the submission file can be more or less detailed, at the discretion of the submitting pharmaceutical company. Guidance can also be found in the Team-NB position papers on documentation requirements and on best practices for the submission of technical documentation ***(2,3)***. Likewise, TR-73-2 follows the same structure as the submission file. The first paragraph of each section of this report describes the proposed content of the corresponding section of the submission file.

To facilitate the review, summaries of each chapter can be provided. Additionally, an overview of design development might be helpful to navigate the GSPR checklist and attached reports. The summaries should clearly reference all relevant test reports that support the conclusions of the summaries. The relevant raw data should also be submitted in order for the NB to verify the conclusions in the summaries and compliance to the GSPRs.

The GSPR guidance **Table 5.1-1** provided in this document for the syringe components, syringe subassembly ready for filling and the device part systematically suggests the amount and depth of information needed for each relevant GSPR to support pharmaceutical companies in assembling the submission file to the NBs. These documents can be added to the relevant chapters in the submission file. Additional inspiration can be found in two reflection papers by the European Biopharmaceutical Enterprises and European Federation of Pharmaceutical Industries and Associations ***(16,17)***.

This document represents the current state of knowledge. As this is a new process based on a new regulatory requirement, expectations of the NBs and competent authorities may diverge as the process evolves. Ultimately, the responsibility for the entire content of the submission file lies with the applicant.

 © 2024 Parenteral Drug Association, Inc.

Licensed to Kuo, Li-Hung/TWi Pharmaceuticals Inc.: Copying and Distribution Prohibited.

4.1 Product Description

The submission file to NBs should include a description of the product as it is intended to be placed on the market (i.e., as a single integral product). The description should contain key information (as in **Table 4.1-1**) as well as references to more detailed information. The summary may be phrased like this:

> Product "Prefilled Syringe XYZ" is intended to be placed on the market in such a way that the medicinal product and the device intended to administer the medicinal product form a single integral product that is intended exclusively for use in the given combination, and is not reusable, as defined by MDR Article 1(9), subparagraph 2.

Table 4.1-1 Example of Marketing Authorization Application (MAA) Information Summary on the Medicinal Product

Category	Status
Invented/trade name of the medicinal product	As per MAA
INN (or common name) of the active substance(s)	As per MAA
Pharmaceutical form(s) and strength(s)	10 mg of INN in 1.5 mL solution in prefilled syringe
Pharmaco-therapeutic group (ATC code)	D084 C52
Indication(s)	As per SmPC[1] module 4.1
Marketing Authorisation Holder (MAH)	Name and address of the legal entity holding the Marketing Authorization or respective EU-authorized representative
Marketing Authorisation type	Centralized application
Marketing Authorisation procedure number	EU/xxx/xxx

[1] Summary of Product Characteristics

4.2 Device

This section of the submission file identifies the device part of the DDC, including its components and subassemblies and a backstop, if needed. The device description may be phrased like this:

> The device is a single-dose disposable syringe with a staked needle. This device will be used to administer a medicinal product as stated in **Table 4.2-1**. **Table 4.2-1** and **Table 4.2-2** summarize the main device attributes and provide an overview of the intended use and target patient population of the device. The commercial version will consist of the components detailed in **Figure 4.2-1** and **Figure 4.2-2**. As this is not a medical device, but a DDC, the classification rules for devices do not formally apply and are applied here for the "virtual" device part ***(18)***.

"Drug for injection" is added here for illustration only; drug is not in scope of this document.

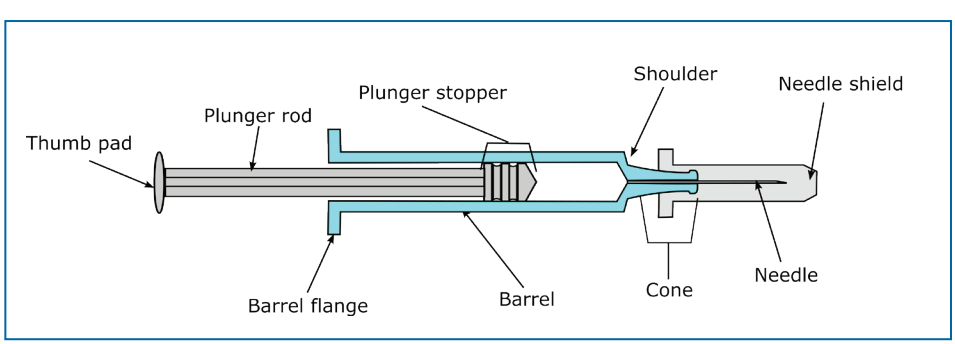

Figure 4.2-1 Schematic Overview of the Drug and the Device with its Components

© 2024 Parenteral Drug Association, Inc.

Licensed to Kuo, Li-Hung/TWi Pharmaceuticals Inc.: Copying and Distribution Prohibited.

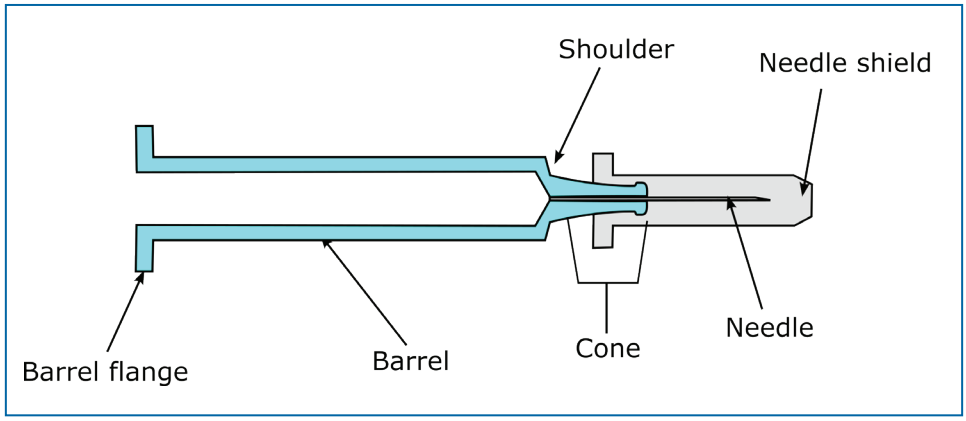

Figure 4.2-2 Syringe Subassembly Ready for Filling

Table 4.2-1 Example of Identification of "Virtual" Device

Category	Status
Device invented name/trade name/project name[1]	Prefilled Syringe XXX 1.5 mL
Device part category	Single-dose prefilled syringe
Risk class of the device part, i.e., "virtual" device part classification and applicable classification rule(s) (per MDR Annex VIII)	Class IIa, per Rule 6: Surgically invasive device intended for transient use and administration of medicinal product is not done in a manner that is potentially hazardous, taking into account the mode of application
Applicable MDA/MDN[2] code (single selection according to Commission Implementing Regulation (EU) 2017/2185; CIR 2017/2185)	MDN 1202
Applicable MDS/MDT[3] code (multiple selection according to CIR 2017/2185)	MDT 2001
Route of Conformity	Conformity will be assessed pursuant to Directive 2001/83/EC, point 12 of Section 3.2 as amended by MDR 2017/745 Article 117, which states that products governed by the Medicinal Products Directive 2001/83/EC shall require an opinion on the conformity of the device part with the relevant General Safety and Performance Requirements (GSPR) set out in Annex I to the MDR, issued by a notified body designated in accordance with that Regulation for the type of device in question.
Notified Body	[insert name of the NB]

[1] Throughout the development of a product, the product name may be adapted respectively. There is often a project name as well as several other terms. Listing several naming options allows an external reviewer to recognize the device part and the integral medicinal product throughout the documentation submitted for assessment.

[2] MDA/MDN: Code given by EMA to reflect design and intended purpose of a device

[3] MDS/MDT: Code given by EMA to describe technologies or processes

 © 2024 Parenteral Drug Association, Inc.

Licensed to Kuo, Li-Hung/TWi Pharmaceuticals Inc.: Copying and Distribution Prohibited.

Table 4.2-2 Example of Device Attributes

Category	Status
Administration route	Subcutaneous
Needle	Staked; covered with needle shield
Reusable or not reusable	Not reusable
Mode of activation	Non-active: energy for dose delivery is created by human force and directly applied to the plunger
Additional feature	Does not require any additional feature for its intended use
Invasiveness	The needle penetrates inside the body through the surface of the body (intact skin), not through a body orifice
Measuring function (as per MEDDEV 2.1/5 (June 1998)) ***(19)***	No measuring function

Depending on the type of device, the following information can also be included: Key functional elements, principle mode of action, accessories (if applicable), compatibility with other devices, specific performance claims of the manufacturer, critical components, previous generations of the device, accuracy and stability for devices with measuring function (not applicable within the scope of this document), identified similar devices available in Europe or other international markets, explanation of any novel features, market history, device history, different variants, changes to the device, sales and complaints, and design stages applied to the device (Annex II) ***(1)***.

The content included in **Table 4.2-3** should be chosen based on the respective current standards (e.g., EN 60601-1-2, EN 62366-1, and TR 62366-2) ***(20-22)***. Additional aspects to be considered could be the frequency of use of the DDC to address the cumulative use and exposure to the device parts, intended use locations on the body, contraindications, warnings, and dose and dose ranges (if other dosages are available).

Table 4.2-3 Example of Device Intended Use and Intended User Population

Category	Status
Intended medical indication	Provide as stated in SmPC (Document XXX), e.g., delivery of a predefined fixed dose of a drug product
Intended patient population	Provide as stated in SmPC (Document XXX), e.g., patient with chronic disease xxx
Intended user profile	Provide as stated in SmPC (Document XXX), e.g., patients, caregivers, healthcare professionals
Intended use environment and conditions of use	Provide as stated in SmPC (Document XXX), e.g., clinical setting (private office and/or hospital), home setting
Intended storage conditions	Provide as stated in SmPC (Document XXX), e.g., do not refrigerate or freeze

Reference documentation is not restricted to the Summary of Product Characteristics (SmPC). Any other product description document can also be used, provided it contains all the needed information.

4.3 Device Function

This section provides a summary of the device function. The description may be phrased like this:

> The staked needle PFS consists of a plunger with a rubber stopper that fits tightly in a cylindrical tube (the syringe barrel) containing the drug. To expel the drug, the user pushes the plunger rod until the rubber stopper hits the end of the barrel. Dosing will be fixed, that is, no dose adjustment with respect to bodyweight and/or body surface area is needed. One PFS equals one dose.

 © 2024 Parenteral Drug Association, Inc.

Licensed to Kuo, Li-Hung/TWi Pharmaceuticals Inc.: Copying and Distribution Prohibited.

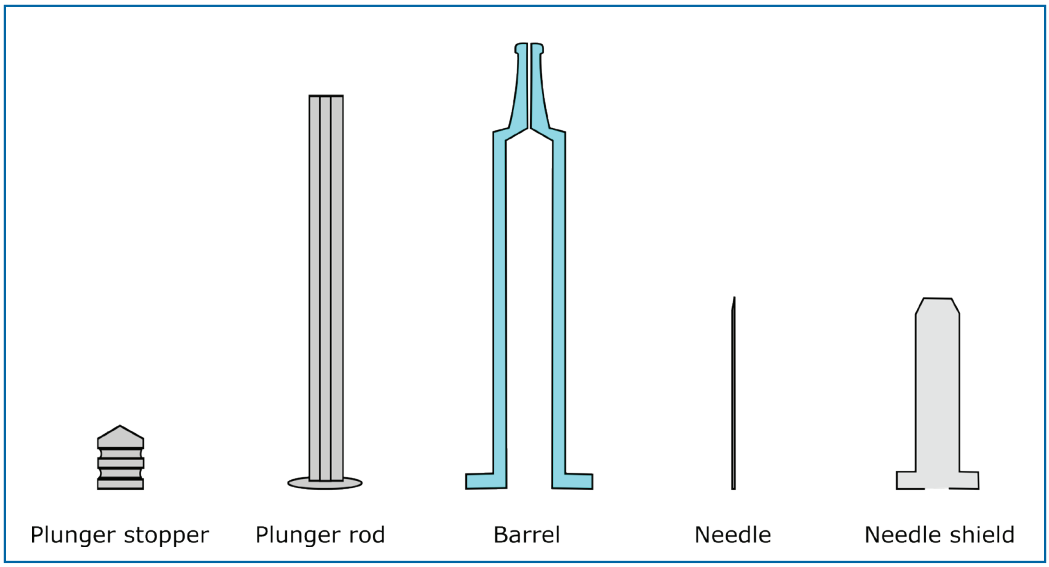

Figure 4.4-1 Components of a Syringe

4.4 Components

Section 4.4 provides a general description of the key functional elements, for example, the parts and components of the device (see **Figure 4.4-1**). Diagrams, photographs, and technical drawings can be included, as needed, clearly indicating the components and respective explanations to support understanding of the information provided.

The component description may be phrased like this:

> The single-use, not reusable "Prefilled Syringe XYZ" with a staked needle consists of the components stated in **Table 4.4-1** and the functional units stated in **Table 4.4-2**.

 © 2024 Parenteral Drug Association, Inc.

Licensed to Kuo, Li-Hung/TWi Pharmaceuticals Inc.: Copying and Distribution Prohibited.

Table 4.4-1 Example of Component Information

Identifier	Component Name/ Number	Functional Description	Specifications
1A	Plunger stopper/PSxxx	Seals the flange end of the syringe and ensures container–closure integrity (CCI) Engages with the plunger rod Determines break-loose force and contributes to glide force	Document XXX Document XXY
1B	Plunger rod/PRxxx	Engages with the plunger stopper Converts kinetic energy into a plunger stopper movement and allows to expel/administer the drug Enables human interaction on thumb pad	Document XXX Document XXY
2A	Barrel/Bxxx	Contains the drug product Holds the needle and engages with the needle shield Interacts with the plunger stopper Contributes to glide force	Document XXX Document XXY
2B	Needle/Nxxx	Enables perforation of the human skin and drug deposition in the target tissue Ensures proper connection of needle and syringe barrel Contributes to glide force Balances injection pain and injection force (flow rate)	Document XXX Document XXY
2C	Needle shield (only soft or also including a rigid part)/ NSxxx	Seals the needle tip end of the syringe and ensures CCI Engages with the syringe barrel cone Protects the needle until use Prevents needle stick prior to product use Determines needle shield removal force	Document XXX Document XXY
2D	Backstop/Bxxx	Supports conversion of user force into longitudinal plunger rod movement May include a feature to prevent plunger removal from the syringe (an optional component)	Document XXX Document XXY
3A	Immediate labeling/ILxxx	Is transparent and spacious enough to allow inspection of drug condition Provides safety information (e.g., drug, strength, expiry date)	Document XXX Document XXY

Table 4.4-2 Example of Functional Unit Information

Identifier	Component Name/ Number	Description	Specifications
1	Plunger stopper/plunger rod/backstop Pxxx	Functional unit composed of components 1A, 1B, and 2D	Document XXX Document XXY
2	Barrel/staked needle/ needle shield Bxxx	Functional unit composed of components 2A, 2B, and 2C	Document XXX Document XXY
3	Syringe Sxxx	Functional unit composed of components 1, 2, and 3A	Document XXX Document XXY

© 2024 Parenteral Drug Association, Inc.

Licensed to Kuo, Li-Hung/TWi Pharmaceuticals Inc.: Copying and Distribution Prohibited.

4.5 Materials

This section provides a description of the (raw) materials of construction that are used for the components, functional units, and subassembled part of the device as presented in the DDC. In addition, the type of direct or indirect body contact (via the drug product) is described to allow an overview of the material categorization (e.g., in line with ISO 10993-1:2018). The presence of any material that is stated in the context of GSPR 10 is emphasized to allow an assessment of the material criticality.

A rationale for the choice of material may be added.

The material description may be phrased like this:

> **Table 4.5-1** contains information on the materials used to produce the components, and information on their body–drug product interaction. Materials relevant in the context of GSPR 10, that is, materials or substances offering concentration limits or requiring "special attention" (e.g., carcinogenic, mutagenic and reprotoxic chemicals (CMR), endocrine-disrupting (ED) substances, nanomaterials) are stated in **Table 4.5-2**.

Table 4.5-1 Example of Material Information

Component Name/ Number	Material Description (Supplier)	Body Contact (Yes – Type/No)	Drug Product Contact (Yes/No)
Plunger stopper/ PSxxx	Elastomer Halobutyl xyz (Supplier xxx) Lubricant: e.g., Silicone oil SOxxx (Supplier xxx) Color/Colorant: Black xyz (Supplier xxx) For more details, see document XXX.	No (indirect body contact via drug product)	Yes
Plunger rod/PRxxx	Polypropylene xyz (Supplier xxx) Color/Colorant: Black xyz (Supplier xxx) For more details, see document XXX.	Yes – intact skin	No
Barrel/Bxxx	Type I Borosilicate Glass (Supplier xxx) Lubricant: Silicone oil SOxxx (Supplier xxx) Ink: Black ink yyy (Supplier xxx) For more details, see document XXX.	Yes – intact skin in contact with outer surface (glass)	Yes
Needle/Nxxx	Stainless Steel X5CrNi18-9 (Supplier xxx) Lubricant: Silicone oil SOxxx (Supplier xxx) Adhesive: Ultraviolet light-reacting curing adhesive xyz (Supplier xxx) For more details, see document XXX.	Yes – surgically invasive	Yes
Needle Shield Soft Part/ NSxxx	Synthetic Isoprene Butyl Blend xyz (Supplier xxx) Color/Colorant: Grey (Supplier xxx) Lubricant: Silicone oil SOxxx (Supplier xxx) For more details, refer to document XXX.	No (indirect body contact via drug product)	Yes
Needle Shield Rigid Part/NSxxx	Polypropylene xyz (Supplier xxx) Color/Colorant: Transparent (Supplier xxx) For more details, see document XXX.	Yes – intact skin	No
Immediate Syringe Labeling/ ILxxx	Label made of Polypropylene xyz (Supplier xxx) Glue: Adhesive xyz (Supplier xxx) Ink: Black ink yyy (Supplier xxx) For more details, see document XXX.	Yes – intact skin	No

 © 2024 Parenteral Drug Association, Inc.

Licensed to Kuo, Li-Hung/TWi Pharmaceuticals Inc.: Copying and Distribution Prohibited.

Table 4.5-2 Example of Materials Relevant in the Context of GSPR 10

Component Name/ Number	Presence of CMR, ED, or Nanomaterial (Yes/No)	If Present, Type of Material
Plunger stopper/ PSxxx	No	Not applicable
Plunger rod/ PRxxx	No	Not applicable
Barrel/ Bxxx	No	Not applicable
Needle/ Nxxx	Yes	Contains substances that are carcinogenic, mutagenic, or toxic to reproduction (CMR) (per GSPR 10.4.1(a), MDR) For more details, see document XXX.
Needle Shield Soft Part/ NSxxx	No	Not applicable
Needle Shield Rigid Part/ NSxxx	No	Not applicable
Immediate Labeling/ ILxxx	Yes	Incorporates and/or consists of nanomaterials (according to definition in Article 2(18) and to GSPR 10.6, MDR) For more details, see document XXX.

4.6 Packaging

Section 4.6 provides a description of all covering and protecting packaging components (e.g., blister, folding box, instructions for use), including tamper-evident features and other means to identify the packaging integrity by the user. The GSPR **Table 5.1-1** does not address packaging-related GSPRs, for example, GSPR 7 or GSPR 10.2, as these are out of scope. (See **Section 1.2.**) However, these aspects need to be addressed within the final submission file (e.g., MAA or variation submission).

A description of the PFS packaging may be phrased like this:

> Each final assembled device, that is, the device being in the final status as an integral part of the DDC, is individually packed in a blister that is placed in a carton box together with a product information leaflet (package insert). An overview of the packaging materials is given in **Table 4.6-1**.

Table 4.6-1 Example of Overview of Packaging Materials

Component Name/Number	Dimensions	Material
Folding Box/ FOxxx	40 mm × 25 mm × 150 mm (Height, Width, Length)	Carton board material xyz (Supplier xxx) For more details, see document XXX.
Tamper-Evident Label/TExxx	15 mm × 23 mm (Width, Length)	Polymeric material xyz (Supplier xxx) For more details, see document XXX.
Blister/BRxxx	See technical drawing xxx.	Foil xxy (Supplier xxx) For more details, see document xxx.
Blister Lid/BLxxx	17 mm × 100 mm (Width, Length)	Blister lidding foil Coated Paper (Supplier xxx) For more details, see document XXX.
Package insert/PIxxx	105 mm × 280 mm (35 mm × 140 mm in folded format) (Width, Length)	Paper xyz (Supplier xxx) For more details, see document XXX.

© 2024 Parenteral Drug Association, Inc.

Licensed to Kuo, Li-Hung/TWi Pharmaceuticals Inc.: Copying and Distribution Prohibited.

4.7 Product Manufacturing

This section provides an overview of the manufacturing process of the device components and related manufacturing control measures as applied by the syringe component suppliers. This information can be provided by the component manufacturers. In addition, it covers the pharmaceutical manufacturing step executed by the applicant.

Further information on manufacturing considerations can be found in TR-73. **Table 4.7.1-1** maps specific information in TR-73 by component.

4.7.1 Components and Subassembly Manufacturing

The level of detail provided by the component manufacturer shall be appropriate to support the pharmaceutical company in their overall risk evaluation and the derived control strategy. Accordingly, the information provided should cover at least:

- Table including procedures to select and qualify raw materials of construction suppliers and control material quality
- Description of the manufacturing process, for example, a process flow diagram (main process steps, critical process steps, in-process controls)
- Processing aids and residuals overview
- Assembly, labeling, and packaging
- List manufacturing sites(s), test site(s), site responsible for release, and sterilization sites (if applicable)
- Sterilization process and validation summary, including decontamination from sterilization residuals
- Acceptance criteria for batch release (specifications)
- Change communication policy for specification changes/major process changes

The supplier of the subassembly is responsible for incorporating available information for the respective sourced components, for example, needles, adhesives, lubricants, needle shield, and coatings, in their information package.

Table 4.7.1-1 contains an overview of relevant information as presented in TR-73 regarding the manufacturing of the different components and subassemblies.

Table 4.7.1-1 Example of Overview of Device Part Manufacturing (Components and Subassembly)

Component Name/ Number	Link to Relevant Information in TR-73	Manufacturing Related Information
Plunger Stopper/PSxxx	Chapters 3, 11, 13	Document XXX
Plunger Rod/PRxxx	Chapters 11, 13	Document XXX
Barrel/Bxxx	Chapters 5, 6, 10, 13	Document XXX
Needle/Nxxx	Chapters 5, 6, 8, 10, 13	Document XXX
Needle Shield (Rigid Part)/NSxxx	Chapters 5, 6, 8, 10, 13	Document XXX
Needle Shield (Soft Part)/NSxxx	Chapters 5, 6, 8, 10, 13	Document XXX

4.7.2 Drug-Device Combination Manufacturing (Filling, Assembly, and Packaging)

Table 4.7.2-1 contains an overview of relevant information from TR-73 on the filling, assembly, and packaging of the final DDC. Respective process validation summaries of all steps should be included.

 © 2024 Parenteral Drug Association, Inc.

Licensed to Kuo, Li-Hung/TWi Pharmaceuticals Inc.: Copying and Distribution Prohibited.

Table 4.7.2-1 Example of Overview of DDC Manufacturing (Filling, Assembly, and Packaging)

Component Name/ Number	Link to Relevant Information in TR-73	Manufacturing Related Information
Filling/Fixxx	Chapter 13	Document XXX
Labeling, Plunger Rod Assembly and Packaging/ LAPxxx	Chapters 11, 13	Document XXX

4.7.3 Storage and Transport

All device components and packaging materials are stored in compliance with the storage conditions defined by the respective supplier until filling and assembly. All facilities involved in filling and assembly are qualified and perform such functions, for example, as monitoring of temperature, room pressure, and relative humidity. References to storage and transport validation studies performed, as well as simulated and/or real-time studies, should be included. Evidence should be provided to establish that the packaging sufficiently protects the device to enable it to achieve its intended performance.

A summary of the shipping/transit simulation study conducted, and the applicable study reports, should be provided.

For more information, see TR-73, Section 11. 9 "Shelf Life and Storage," and Section 12.3.5 "Shipping and Distribution of Semifinished Syringes and PFSs."

5.0 Applicable GSPRs and Supportive Documents

The applicant is legally responsible for complying with all applicable GSPRs. GSPRs, as such, are not applicable to the individual components or device parts, only to the final DDC as it is intended to be placed on the market.

To support the creation of a submission file, documents provided by suppliers to the applicant can be used. The applicant can either include them directly as they are or incorporate/transcribe them into the final submission file.

5.1 Supportive Documents Needed to Address GSPRs

Table 5.1-1 provides a list of documents that should be provided to support the creation of **Section 4.0**.

This list is neither exhaustive, nor are all the documents necessarily required. There should always be agreement between the applicant and the suppliers on the content, granularity, and format of the documents needed.

Throughout the list, different terminology is used, such as file, report, plan, protocol, document, summary, evidence, or statement. Most terms have slightly different meanings and are used differently throughout industry. Therefore, the length and depth of the content is variable and depends upon the agreement made between the different parties. However, all documents (individually or combined) should provide sufficient evidence to ensure compliance with the relevant GSPR.

Compliance of a DDC, with relevant *European Pharmacopoeia* (Ph. Eur.) chapter(s) or monograph(s), should be demonstrated. Whenever technical standards represent the state of the art, they should be used. In the case of conflicting requirements, as the drug is the principal mode of action, Ph. Eur. requirements, EU guidances, and International Council for Harmonisation (ICH) guidelines take precedence over International Organization for Standardization (ISO) standards. The documents should always represent generally acknowledged state-of-the-art standards. In TR-73-2, "ISO" is used

 © 2024 Parenteral Drug Association, Inc.

Licensed to Kuo, Li-Hung/TWi Pharmaceuticals Inc.: Copying and Distribution Prohibited.

as an overarching, representative term. ISO can be the current version of the Final Draft International Standard (FDIS) or European Standard (EN) version, depending on availability and upon agreement between the parties involved.

The columns in **Table 5.1-1** are organized by device part, syringe subassembly, and plunger stopper to reflect the current structure in industry and to build a bridge between the suppliers and the applicant. These three points summarize the contents of each of the corresponding columns in the table:

- **Evidence of Conformity of the Device Part of the Prefilled Syringe**
  This column refers to the device part (see **Glossary**), including the soft needle shield, needle with lubrication, polymer or glass barrel with lubrication, if existing, and plunger stopper, including lubrication, coating, and/or lamination if existing. Content listed here is what the applicant provides to the NB.

- **Supportive Documents and Methods for the Syringe Subassembly Ready for Filling**
  This column refers to the syringe subassembly ready for filling (see **Glossary**), including the soft needle shield, needle with lubrication, and polymer or glass barrel with lubrication if existing. Content listed here is provided by the suppliers of the syringe subassembly to the applicant.

- **Supportive Documents and Methods for Plunger Stoppers**
  This column refers to the plunger stopper, but also to the soft part of the needle shield, including lubrication, coating, and/or lamination if existing. Content listed here is provided by the suppliers of the plunger stopper/needle shield to the applicant.

Documents regarding the plunger rod, the rigid part of the needle shield (if used), and the backstop (if used) are listed in **Section 5.3**.

 © 2024 Parenteral Drug Association, Inc.

Licensed to Kuo, Li-Hung/TWi Pharmaceuticals Inc.: Copying and Distribution Prohibited.

Table 5.1-1 Supportive Documents Suggested to Address Relevant GSPRs

GSPR	Scope	Device Part	Syringe Subassembly	Plunger Stoppers
	Content	**Evidence of Conformity of the Device Part[1] of the Prefilled Syringe**	**Supportive Documents and Methods for the Syringe Subassembly Ready for Filling[2]**	**Supportive Documents and Methods for Plunger Stoppers[3]**
		Provided by Applicant	**Provided by Supplier**	**Provided by Supplier**
Chapter I – General Requirements[4]				
1 – Intended Performance				
1	Intended Performance	• Intended Use statement or reference to information provided in **Table 4.2-3** • Risk management file • Design verification summary report • Biological evaluation report • Usability engineering file • Traceability matrix • Benefit/risk assessment • Evidence of compliance with the applicable parts of GMP requirements for medicinal products ○ ISO 14971, ICH Q9 ○ ISO 10993-1 ○ ISO 11040-8 ○ IEC 62366-1	• High-level risk management summary as evidence for the implementation of a RMS • Evidence how suppliers specified and verified performance • Evidence for the implementation of a QMS, e.g., according to the applicable parts of ○ ISO 13485 ○ ISO 15378	• High-level risk management summary as evidence for the implementation of a RMS • Evidence how suppliers specified and verified performance • Evidence for the implementation of a QMS, e.g., according to the applicable parts of ○ ISO 13485 ○ ISO 15378
2 – Risk Reduction I				
2	Risk Reduction I	• Risk management file • Evidence for the implementation of a RMS, e.g., according to ○ ISO 14971, ICH Q9	• High-level risk management summary as evidence for the implementation of a RMS • Evidence how suppliers specified and verified performance	• High-level risk management summary as evidence for the implementation of a RMS • Evidence how suppliers specified and verified performance
3 – Risk Management System				
3 (a-f)	Risk management system	• Risk management file, including ○ Risk management plan ○ Use-related risk analysis ○ Hazard identification document ○ Post-market surveillance plan • Evidence for the implementation of a RMS, e.g., according to ○ ISO 14971, ICH Q9	• High-level risk management summary as evidence for the implementation of a RMS • Evidence for the implementation of a QMS, e.g., according to the applicable parts of ○ ISO 13485 ○ ISO 15378	• High-level risk management summary as evidence for the implementation of a RMS • Evidence for the implementation of a QMS, e.g., according to the applicable parts of ○ ISO 13485 ○ ISO 15378

[1] See Glossary: incl. barrel, lubrication (if needed), needle and adhesive, NS/RNS, plunger stopper, plunger rod, backstop; suggestions for documentation on the rigid part of the RNS, plunger rod and backstop are provided in **Section 5.3**.
[2] Incl. lubrication (if existing), needle and adhesive, NS/RNS (for supportive documentation on the soft part of the NS, please use column 3).
[3] Incl. lubrication, coating and/or lamination
[4] For addressing Quality Management System considerations for Device Parts, a reference to a supplier's ISO 15378 and/or ISO 13485 certification can be added.

 © 2024 Parenteral Drug Association, Inc.

Licensed to Kuo, Li-Hung/TWi Pharmaceuticals Inc.: Copying and Distribution Prohibited.

(Table 5.1-1 Continued)

GSPR	Scope	Device Part	Syringe Subassembly	Plunger Stoppers
4 – Risk Control Measures				
4 (a-c)	Risk control measures	• Risk management file, including ○ Risk management plan ○ Hazard identification document ○ Use-related risk analysis ○ Post-market surveillance plan • Evidence of compliance with the applicable parts of GMP requirements for medicinal products ○ ISO 14971, ICH Q9 ○ IEC 62366-1	• High-level risk management summary as evidence for the implementation of a RMS • Evidence for the implementation of a QMS, e.g., according to the applicable parts of ○ ISO 13485 ○ ISO 15378	• High-level risk management summary as evidence for the implementation of a RMS • Evidence for the implementation of a QMS, e.g., according to the applicable parts of ○ ISO 13485 ○ ISO 15378
5 – Risk Reduction II				
5	Risk reduction II	• Risk management file, including ○ Risk management plan ○ Hazard identification document ○ Use-related risk analysis • Usability engineering file, including ○ information for safety, incl. residual risks ○ intended use, users and context of use information • Evidence of compliance with the applicable parts of GMP requirements for medicinal products ○ ISO 14971, ICH Q9 ○ IEC 62366-1	• High-level risk management summary as evidence for the implementation of a RMS • Evidence for the implementation of a QMS, e.g., according to the applicable parts of ○ ISO 13485 ○ ISO 15378	• High-level risk management summary as evidence for the implementation of a RMS • Evidence for the implementation of a QMS, e.g., according to the applicable parts of ○ ISO 13485 ○ ISO 15378
6 – Characteristics and Performance				
6	Characteristics and performance	• Release Specification • Shelf life and storage information • Design verification summary report • Traceability matrix • Evidence of compliance with the applicable parts of GMP requirements for medicinal products ○ ICH Q1A ○ ISO 11040-8	• Packaging validation summary • Shelf life and storage information • Real-time stability (aging) / accelerated aging studies summary, e.g., based on ○ ICH Q1A and/or ASTM F1980, ○ ISO 11040-4, -6, -7	• Packaging validation summary • Shelf life and storage information • Real-time stability (aging) / accelerated aging studies summary, e.g., based on ○ ICH Q1A and/or ASTM F1980 ○ ISO 11040-5

 © 2024 Parenteral Drug Association, Inc.

Licensed to Kuo, Li-Hung/TWi Pharmaceuticals Inc.: Copying and Distribution Prohibited.

(Table 5.1-1 Continued)

GSPR	Scope	Device Part	Syringe Subassembly	Plunger Stoppers
7 – Design, Manufacture, Packaging				
7	Design, manufacture, packaging	• Release Specification • Shelf life and storage information • Design verification summary report • Traceability matrix • Shipping & transport validation summaries • Evidence of compliance with the applicable parts of GMP requirements for medicinal products ○ ICH Q1A ○ ISO 11040-8 ○ ASTM D4169 ○ ISO 11607-1 (if applicable)	• Packaging validation summary • Shelf life and storage information • Real-time stability (aging) / accelerated aging studies summary, e.g., based on ICH Q1A and/or ASTM F1980 • Statements on compliance with the applicable parts of ○ ISO 11040-4, -6, -7 ○ ASTM D4169	• Packaging validation summary • Shelf life/Use-by date and storage information • Real-time stability (aging) / accelerated aging studies summary, e.g., based on ICH Q1A and/or ASTM F1980 • Statements on compliance with the applicable parts of ○ ISO 11040-5
8 – Risks and Side-Effects				
8	Risks and side-effects	• Risk management file, including ○ Risk management report ○ Benefit/risk assessment • Usability engineering file, including ○ Information for safety, incl. residual risks • Evidence for the implementation of a RMS and a usability engineering process, e.g., according to ○ ISO 14971, ICH Q9 ○ IEC 62366-1	• High-level risk management summary as evidence for the implementation of a RMS • Evidence for the implementation of a QMS, e.g., according to the applicable parts of ○ ISO 13485 ○ ISO 15378	• High-level risk management summary as evidence for the implementation of a RMS • Evidence for the implementation of a QMS, e.g., according to the applicable parts of ○ ISO 13485 ○ ISO 15378

 © 2024 Parenteral Drug Association, Inc.

Licensed to Kuo, Li-Hung/TWi Pharmaceuticals Inc.: Copying and Distribution Prohibited.

(Table 5.1-1 Continued)

GSPR	Scope	Device Part	Syringe Subassembly	Plunger Stoppers
Chapter II – Requirements Regarding Design and Manufacture				
10 – Chemical, Physical, and Biological Properties				
10.1 (a)	Chemical, physical, and biological properties	• Design verification summary report, incl. ○ Biological Evaluation report • Evidence of compliance with the applicable parts of ○ GMP requirements for medicinal products, incl. – Extractables & Leachables – Compatibility ○ Biocompatibility according to – ISO 10993-1 – ISO 11040-8 • Evidence of compliance with material safety requirements based on supplier information	• Summary of assessment of ○ Extractables, incl. ICH Q3D elements ○ Biocompatibility, based on ISO 10993-1 • Statement on REACH • Content declaration on substances of concern, e.g., TSE/BSE, latex, nitrosamines, CMR/ED, phthalates • Evidence of compliance with Ph. Eur. 3.1.8., 3.2.1, 3.2.2.1, (3.1.16, 3.1.17, 3.3.9.) [5] • Typical physical properties • Specification • Quality Certificate • Statements on compliance with the applicable parts of ○ ISO 11040-4, -6 ○ ISO 7864 ○ ISO 9626 ○ ISO 15510	• Summary of assessment of ○ Extractables, incl. ICH Q3D elements ○ Biocompatibility, based on ISO 10993-1, USP <87> • Statement on REACH • Content declaration on substances of concern, e.g., TSE/BSE, latex, nitrosamines, CMR/ED, phthalates • Evidence of compliance with Ph. Eur. 3.1.8., 3.2.9 • Typical physical properties • Specification • Quality Certificate • Statements on compliance with the applicable parts of ○ ISO 8871-1, -2, -3, -4 ○ ISO 11040-5
10.1 (b)	Materials, substances, compatibility, material properties	• Design verification summary report, incl. ○ Biological Evaluation report • Evidence of compliance with the applicable parts of ○ GMP requirements for medicinal products, incl. – Extractables & Leachables – Compatibility ○ Biocompatibility according to – ISO 10993-1 – ISO 11040-8	• Summary of assessment of ○ Extractables, incl. ICH Q3D elements • Biocompatibility, based on ISO 10993-1 • Statement on REACH • Content declaration on substances of concern, e.g., TSE/BSE, latex, nitrosamines, CMR/ED, phthalates • Evidence of compliance with Ph. Eur. 3.1.8., 3.2.1, 3.2.2.1, (3.1.16, 3.1.17, 3.3.9.)[5] • Specification • Quality Certificate • Statements on compliance with the applicable parts of ○ ISO 11040-4, -6 ○ ISO 7864 ○ ISO 9626 ○ ISO 15510	• Summary of assessment of ○ Extractables, incl. ICH Q3D elements • Biocompatibility, based on ISO 10993-1, USP <87> • Statement on REACH • Content declaration on substances of concern, e.g., TSE/BSE, latex, nitrosamines, CMR/ED, phthalates • Evidence of compliance with Ph. Eur. 3.1.8., 3.2.9 • Specification • Quality Certificate • Statements on compliance with the applicable parts of ○ ISO 8871-1, -2, -3, -4 ○ ISO 11040-5

[5] Still in draft at the time this document was published.

 © 2024 Parenteral Drug Association, Inc.

Licensed to Kuo, Li-Hung/TWi Pharmaceuticals Inc.: Copying and Distribution Prohibited.

(Table 5.1-1 Continued)

GSPR	Scope	Device Part	Syringe Subassembly	Plunger Stoppers
10.1 (d)	Materials, substances, compatibility, material properties	• Risk management file, including ○ Process risk analysis • Design verification summary report, incl. ○ Biological Evaluation report ○ Control strategy • Evidence of compliance with the applicable parts of ○ GMP requirements for medicinal products ○ Biocompatibility according to – ISO 10993-1 – ISO 11040-8 • Evidence for the implementation of a RMS, e.g., according to the applicable parts of ○ ISO 14971, ICH Q9 • Evidence of compliance with the applicable parts of ○ ISO 15378 • Evidence of compliance with material safety requirements based on supplier information	• Summary of assessment of ○ Extractables, incl. ICH Q3D elements ○ Biocompatibility, based on ISO 10993-1 • Evidence for the implementation of a QMS, e.g., according to the applicable parts of ○ ISO 13485 ○ ISO 15378 • Process validation summary, incl critical process parameters • High-level risk management summary as evidence for the implementation of a RMS, incl. critical process parameters	• Summary of assessment of ○ Extractables, incl. ICH Q3D elements ○ Biocompatibility, based on ISO 10993-1, USP <87> • Evidence for the implementation of a QMS, e.g., according to the applicable parts of ○ ISO 13485 ○ ISO 15378 • Process validation summary, incl. critical process parameters • High-level risk management summary as evidence for the implementation of a RMS, incl. critical process parameters
10.1 (f)	Materials, substances, compatibility, material properties	• Design verification summary report, incl. ○ Confirmation of suitability of the materials for the intended use • Evidence of compliance of the material with the required mechanical properties for the intended use based on supplier information	• Specification • Quality Certificate • Statements on compliance with the applicable parts of ○ ISO 11040-4, -6 ○ ISO 9626 ○ ISO 7864	• Specification • Quality Certificate • Statements on compliance with the applicable parts of ○ ISO 8871-1, -2, -3, -4 ○ ISO 11040-5
10.1 (g)	Materials, substances, compatibility, material properties	• Design verification summary report, incl. ○ Confirmation of suitability of materials for the intended use • Evidence of compliance of the material with the required mechanical properties for the intended use based on supplier information	• Evidence of compliance with Ph. Eur. 3.1.8, 3.2.1, 3.2.9 • Specification • Quality Certificate • Statements on compliance with the applicable parts of ○ ISO 11040-4, -6 ○ ISO 9626 ○ ISO 7864	• Evidence of compliance with Ph. Eur. 3.1.8., 3.2.9. • Specification • Quality Certificate • Statements on compliance with the applicable parts of ○ ISO 8871-1, -2, -3, -4 ○ ISO 11040-5 • Information on the surface finish, e.g., lubrication, coating, lamination

 © 2024 Parenteral Drug Association, Inc.

Licensed to Kuo, Li-Hung/TWi Pharmaceuticals Inc.: Copying and Distribution Prohibited.

(Table 5.1-1 Continued)

GSPR	Scope	Device Part	Syringe Subassembly	Plunger Stoppers
10.1 (h)	Materials, substances, compatibility, material properties	• Design verification summary report, incl. ○ Confirmation of suitability of the materials for the intended use • Control strategy • Evidence of compliance of the material with the required mechanical properties for the intended use based on supplier information	• Evidence of compliance with Ph. Eur. 3.1.8., 3.2.1, 3.2.2.1, (3.1.16, 3.1.17, 3.3.9.)[5] • Specification • Quality Certificate • Statements on compliance with the applicable parts of ○ ISO 11040-4, -6 ○ ISO 9626 ○ ISO 7864 ○ ISO 15510	• Evidence of compliance with Ph. Eur. 3.1.8, 3.2.9 • Specification • Quality Certificate • Statements on compliance with the applicable parts of ○ ISO 8871-1, -2, -3, -4 ○ ISO 11040-5
10.2	Risks related to contaminants and residues	• Risk management file, including ○ Process risk analysis • Design verification summary report, incl. ○ Biological Evaluation report ○ Control strategy • Evidence of compliance with the applicable parts of ○ GMP requirements for medicinal products ○ EMA/CHMP/CVMP/QWP/850374/2015 ○ Biocompatibility according to – ISO 10993-1 – ISO 11040-8 • Evidence for the implementation of a RMS, e.g., according to the applicable parts of ○ ISO 14971, ICH Q9 • Evidence of compliance with the applicable parts of ○ ISO 15378 • Evidence of compliance with material safety requirements based on supplier information	• Summary of assessment of ○ Extractables, incl. ICH Q3D elements ○ Biocompatibility, based on ISO 10993-1 • Process validation summary, incl. process residues • Washing and sterilization validation summary • Manufacturing flow chart, incl. critical process steps and the according controls • Evidence of compliance with Ph. Eur. 3.1.8, 3.2.1, 3.2.9 • Statements on compliance with the applicable parts of ○ ISO 11040-4, -6 ○ EMA/CHMP/CVMP/QWP/850374/2015 ○ ISO 10993-7 ○ ISO 11135	• Summary of assessment of ○ Extractables, incl. ICH Q3D elements ○ Biocompatibility, based on ISO 10993-1, USP <87> • Specification, incl. endotoxins, bioburden, particles • Quality certificate, incl. endotoxins, bioburden, particles • Process validation summary, incl. process residues • Washing and sterilization validation summary • Manufacturing flow chart, incl. critical process steps and the according controls • Evidence of compliance with Ph. Eur. 3.1.8., 3.2.9 • Statements on compliance with the applicable parts of ○ ISO 8871-1, -3, -4

 © 2024 Parenteral Drug Association, Inc.

Licensed to Kuo, Li-Hung/TWi Pharmaceuticals Inc.: Copying and Distribution Prohibited.

(Table 5.1-1 Continued)

GSPR	Scope	Device Part	Syringe Subassembly	Plunger Stoppers
10.3	Use with materials and substances	• Risk management file, incl. ○ Risk management plan ○ Hazard identification document ○ Use-related risk analysis • Design verification summary report, incl. ○ Confirmation of suitability of materials for the intended use ○ Control strategy • Evidence of compliance with the applicable parts of ○ GMP requirements for medicinal products ○ EMA/CHMP/CVMP/QWP/850374/2015 ○ Biocompatibility according to – ISO 10993-1 – ISO 11040-8 • Evidence for the implementation of a RMS, e.g., according to the applicable parts of ○ ISO 14971, ICH Q9 • Evidence of compliance with the applicable parts of ISO 15378 • Evidence of compliance of the material with the required mechanical properties for the intended use based on supplier information	• Summary of assessment of ○ Extractables, incl. ICH Q3D elements ○ Biocompatibility, based on ISO 10993-1 • Content declaration on substances of concern, e.g., TSE/BSE, latex, nitrosamines, CMR/ED, phthalates • Evidence of compliance with Ph. Eur. 3.1.8., 3.2.1. • Statements on compliance with the applicable parts of ○ ISO 11040-4, -6 ○ ISO 10993-7 ○ EMA/CHMP/CVMP/QWP/850374/2015	• Summary of assessment of ○ Extractables, incl. ICH Q3D elements ○ Biocompatibility, based on ISO 10993-1, USP <87> • Content declaration on substances of concern, e.g., TSE/BSE, latex, nitrosamines, CMR/ED, phthalates • Evidence of compliance with Ph. Eur. 3.1.8., 3.2.9. • Statements on compliance with the applicable parts of ○ ISO 8871-4
10.4.1	Risks posed by substances or particles	• Risk management file, incl. ○ Design risk analysis • Design verification summary report, incl. ○ Biological Evaluation report ○ Control strategy • Evidence of compliance with the applicable parts of ○ GMP requirements for medicinal products ○ EMA/CHMP/CVMP/QWP/850374/2015 ○ Biocompatibility according to – ISO 10993-1 – ISO 11040-8 • Evidence for the implementation of a RMS, e.g., according to the applicable parts of ○ ISO 14971, ICH Q9 • Evidence of compliance with the applicable parts of ISO 15378 • Evidence of compliance with material safety requirements based on supplier information	• Summary of assessment of ○ Extractables, incl. ICH Q3D elements ○ Biocompatibility, based on ISO 10993-1 • Content declaration on substances of concern, e.g., TSE/BSE, latex, nitrosamines, CMR/ED, phthalates • Specification, incl. particles • Quality Certificate • Process validation summary, incl. process residues • Washing and sterilization validation summary • Manufacturing flow chart, incl. critical process steps and the according controls	• Summary of assessment of ○ Extractables, incl. ICH Q3D elements ○ Biocompatibility, based on ISO 10993-1, USP <87> • Content declaration on substances of concern, e.g., TSE/BSE, latex, nitrosamines, CMR/ED, phthalates • Specification, incl. particles • Quality Certificate • Process validation summary, incl. process residues • Washing and sterilization validation summary • Manufacturing flow chart, incl. critical process steps and the according controls • Statements on compliance with the applicable parts of ○ ISO 8871-1, -3, -4

 © 2024 Parenteral Drug Association, Inc.

Licensed to Kuo, Li-Hung/TWi Pharmaceuticals Inc.: Copying and Distribution Prohibited.

(Table 5.1-1 Continued)

GSPR	Scope	Device Part	Syringe Subassembly	Plunger Stoppers
10.4.2	CMR and/or endocrine-disrupting substances	• Not directly applicable (link to GSPR 10.4.1) • If applicable, benefit/risk assessment • Evidence of compliance with material safety requirements based on supplier information	• Content declaration on CMR/ED substances	• Content declaration on CMR/ED substances
10.4.3	Phthalates	• Evidence of compliance with material safety requirements based on supplier information	• Content declaration on phthalates	• Content declaration on phthalates
10.5	Risks related to unintentional ingress of substances	• Risk management file, including ○ Design risk analysis • Design verification summary report, incl. ○ Control strategy ○ Shipping validation • Evidence of compliance with the applicable parts of ○ GMP requirements for medicinal products ○ EMA/CHMP/CVMP/QWP/850374/2015 incl. CCI and stability testing • Evidence for the implementation of a RMS, e.g., according to the applicable parts of ○ ISO 14971, ICH Q9 • Evidence of compliance with the applicable parts of ISO 15378	• For polymer syringes: Permeability studies summary • Statement on compliance with the applicable parts of ○ ISO 11040-4, -6, incl. Removal force and closure system/barrel integrity	• Information on physical properties, incl. water vapor/oxygen transmission rate • Statements on compliance with the applicable parts of ○ ISO 2782-1

 © 2024 Parenteral Drug Association, Inc.

Licensed to Kuo, Li-Hung/TWi Pharmaceuticals Inc.: Copying and Distribution Prohibited.

(Table 5.1-1 Continued)

GSPR	Scope	Device Part	Syringe Subassembly	Plunger Stoppers
10.6	Risks related to particles	• Risk management file, incl. ○ Design risk analysis • Design verification summary report, incl. ○ Biological Evaluation report ○ Control strategy • Evidence of compliance with the applicable parts of ○ GMP requirements for medicinal products ○ EMA/CHMP/CVMP/QWP/850374/2015 • Evidence for the implementation of a RMS, e.g., according to the applicable parts of ○ ISO 14971, ICH Q9 • Evidence of compliance with the applicable parts of ○ ISO 15378 • Evidence of compliance with material safety requirements based on supplier information	• Specification, incl. particles • Quality Certificate • Statement on use of nanomaterials • Statement on compliance with the applicable parts of ISO 11040-4, -6	• Specification, incl. particles • Quality Certificate • Statement on use of nanomaterials • Statement on compliance with the applicable parts of ○ ISO 8871-3
11 – Infection and Microbial Contamination				
11.1 (a-d)	Possible risks of infection to patients	• Risk management file, incl. ○ Design risk analysis • Design verification summary report, incl. ○ Biological Evaluation report ○ Control strategy • Usability engineering file, incl. ○ Information for safety, incl. residual risks ○ Intended use, users, and context of use information • Evidence of compliance with the applicable parts of ○ GMP requirements for medicinal products ○ EMA/CHMP/CVMP/QWP/850374/2015 • Evidence for the implementation of a RMS, e.g., according to the applicable parts of ○ ISO 14971, ICH Q9 • Evidence of compliance with the applicable parts of ISO 15378	• Sterilization validation summary, incl. reference to applicable parts of ○ ISO 11040-4, -6, -7 ○ ISO 11135 ○ ISO 11137 ○ ISO 14937 ○ ASTM 4169/ISTA 3E • Transport validation summary, incl. transportation and shipping studies • Specification • Quality Certificate, incl. sterilization confirmation	• Sterilization validation summary, incl. reference to applicable parts of ○ ISO 17665 ○ ISO 11135 ○ ISO 11137 ○ ISO 11607-1 ○ ASTM 4169 ISTA 3E • Transport validation summary, incl. transportation and shipping studies • Specification • Quality Certificate, incl. sterilization confirmation

 © 2024 Parenteral Drug Association, Inc.

Licensed to Kuo, Li-Hung/TWi Pharmaceuticals Inc.: Copying and Distribution Prohibited.

(Table 5.1-1 Continued)

GSPR	Scope	Device Part	Syringe Subassembly	Plunger Stoppers
11.7	Packaging for non-sterile devices	• Shipping & transport validation summaries • Evidence of compliance with the applicable parts of ○ GMP requirements for medicinal products ○ EMA/CHMP/CVMP/QWP/850374/2015 – ISO 11040-8 – ASTM D4169	• Not addressable by the component supplier	• Not addressable by the component supplier
13 – Devices Incorporating Materials of Biological Origin				
13.2	Devices manufactured utilizing tissues or cells of animal origin	• Evidence of compliance with material safety requirements based on supplier information • EMA/410/01 Rev. 3	• Content declaration on TSE/BSE • Statement on use of substances with animal origin	• Content declaration on TSE/BSE • Statement on use of substances with animal origin
13.3	Devices manufactured utilizing nonviable biological substances	• Evidence of compliance with material safety requirements based on supplier information	• Content declaration on substances of concern, e.g., latex	• Content declaration on substances of concern, e.g., latex

 © 2024 Parenteral Drug Association, Inc.

Licensed to Kuo, Li-Hung/TWi Pharmaceuticals Inc.: Copying and Distribution Prohibited.

(Table 5.1-1 Continued)

GSPR	Scope	Device Part	Syringe Subassembly	Plunger Stoppers
14.2 (a-g)	Various risk reduction requirements	• Risk management file, including ○ Design risk analysis • Design verification summary report, incl. ○ Biological Evaluation report ○ Control strategy • Usability engineering file, including ○ Information for safety, incl. residual risks ○ intended use, users and context of use information • Evidence of compliance with the applicable parts of ○ GMP requirements for medicinal products • Evidence for the implementation of a RMS, e.g., according to the applicable parts of ○ ISO 14971, ICH Q9 • Evidence of compliance with the applicable parts of ISO 15378	• Not addressable by the component supplier	• Not addressable by the component supplier
14.7	Safe disposal	• Risk management file, including ○ Design risk analysis • Usability engineering file, including intended use, users and context of use information • Instructions For Use	• Declaration on European Directive 94/62 (EC) on Packaging and Packaging Waste	• Declaration on European Directive 94/62 (EC) on Packaging and Packaging Waste
20 – Protection Against Mechanical and Thermal Risks				
20.1	Mechanical risks	• Risk management file, including ○ Design risk analysis • Design verification summary report, incl. ○ Control strategy • Usability engineering file, including ○ Information for safety, incl. residual risks ○ intended use, users and context of use information • Shipping & transport validation summaries • Evidence for the implementation of a RMS and a usability engineering process, e.g., according to ○ ISO 14971, ICH Q9 ○ IEC 62366-1 • Evidence of compliance with the applicable parts of ○ GMP requirements for medicinal products ○ ISO 11040-8 ○ ASTM D4169	• Transport validation summary, incl. transportation and shipping studies	• Transport validation summary, incl. transportation and shipping studies

 © 2024 Parenteral Drug Association, Inc.

Licensed to Kuo, Li-Hung/TWi Pharmaceuticals Inc.: Copying and Distribution Prohibited.

(Table 5.1-1 Continued)

GSPR	Scope	Device Part	Syringe Subassembly	Plunger Stoppers
21 – Risks Related to Energy or Substances				
22 – Use by Lay Persons				
22.1	Use by lay persons I	• Risk Management File • Usability Engineering File • IFU (or medicinal product PIL whichever is applicable) • Evidence for the implementation of a RMS and a usability engineering process, e.g., according to ○ ISO 14971, ICH Q9 ○ IEC 62366-1	• Not addressable by the component supplier	• Not addressable by the component supplier
22.2	Use by lay persons II	• Risk management file, including ○ Design risk analysis • Design verification summary report • Usability there is engineering file, including ○ Information for safety, incl. residual risks ○ intended use, users and context of use information • Instructions For Use	• Not addressable by the component supplier	• Not addressable by the component supplier
22.3	Use by lay persons III	• Risk management file, including ○ Design risk analysis • Design verification summary report • Usability engineering file, including ○ Information for safety, incl. residual risks ○ intended use, users and context of use information • Instructions for Use	• Not addressable by the component supplier	• Not addressable by the component supplier
Chapter III – Requirements regarding the Information Supplied with the Device – General Requirements for Label and Instructions for Use				
23 – Label and Instructions for Use				
23	General requirements regarding information	• Might be partially applicable, see Chapter 5.5		

 © 2024 Parenteral Drug Association, Inc.

Licensed to Kuo, Li-Hung/TWi Pharmaceuticals Inc.: Copying and Distribution Prohibited.

5.2 Chapter I — Risk Management

Chapter I of the MDR GSPR list relates primarily to risk management (RM). The pharmaceutical company is required to have an internal RM process that assesses risks associated with their device part in the context of their DDC and its intended use. This may be part of a device RM plan or combined product (i.e., including drug) RM plan. In that case, either the RM standard operating procedure or a description of the process can be shared, for example, as part of an RM file. ICH *Quality Guideline Q9: Quality Risk Management* provides guidance, as does *ISO 14971:2019 Medical Devices — Application of Risk Management to Medical Devices* which states:

> The *risk management file* need not physically contain all the *records* and other documents. However, it needs to contain at least references or pointers to all required documentation, so that the *manufacturer* can assemble the information referenced in the *risk management file* in a timely manner. […] The *risk management file* can be in any form or type of medium. […] See ISO/TR 24971 for guidance on establishing a *risk management file* for components and devices that were designed without using ISO 14971" ***(11)***.

Suppliers of components or device parts can support the pharmaceutical company by providing appropriate documentation, which demonstrates a RM process that communicates risks associated with the respective component(s)/part(s). In the case of an existing RM plan, the supplier may also share this with the pharmaceutical company.

As always, the responsibility of deciding if and how the supportive documents will be used remains with the pharmaceutical company.

5.3 Plunger Rod, Rigid Part of the Rigid Needle Shield and Finger Flange Extension/Backstop

Fewer GSPRs require documentation on the plunger rod, the rigid part of the RNS and, if used, a finger flange extension/backstop. But, as they belong to the final DDC and contribute to the overall safety and performance, they still need to be assessed and included in the submission file. To preserve the clarity and readability of the GSPR table (**Table 5.1-1**), they are addressed separately in this section.

Table 5.3-1 provides examples of requirements that should be addressed and can be supported using supplier documentation, for example, general statements, compliance certificates, data sheets, and test reports.

 © 2024 Parenteral Drug Association, Inc.

Licensed to Kuo, Li-Hung/TWi Pharmaceuticals Inc.: Copying and Distribution Prohibited.

Table 5.3-1 Examples of Supportive Documents for Plunger Rod, Rigid Part of RNS and, if used, Finger Flange Extension/Backstop

Material Safety
Biocompatibility information
• ISO 10993-1: Brief description of the approach, incl categorization, endpoints, and biological testing strategy
• ISO 10993-5: Cytotoxicity
• ISO 10993-10: Sensitization (and Irritation)
• ISO 10993-18: Physical and/or chemical information
• ISO 10993-23: Irritation
Materials of concern
• Statement on the use of/content of: ○ Phthalates ○ CMR/ED substances ○ Substances regulated under REACH: Substances of very high concern ○ ICH Q3D: Elemental Analysis ○ Latex ○ Materials of animal origin (TSE/BSE; EU Note for Guidance EMA/410/01 revision 3) (23) • ISO 10993-18: Physical and/or chemical information, incl. ingredients and processing aids
• MDR Chapter II, GSPR 13: Devices incorporating materials of biological origin (products or derivatives of human origin; devices manufactured utilizing nonviable biological substances)
• ISO 22442: Medical devices utilizing animal tissues and their derivatives, Parts 1, 2, and 3
• Material Safety Data Sheet, Technical Safety Data Sheet
Technical Information and Performance
• Detailed technical drawings
• Connectivity statement, if applicable (e.g., thread part suitable for 1 mL long plunger with 17 pitch on 25.4 mm)
• Relevant physical properties

5.4 Applicability of Requirements regarding Design and Manufacture

To support the development of a holistic control strategy for PFS, **Figure 5.4-1** provides an overview of subrequirements of GSPRs 10, 11, 13, 14, and 15 applicable to PFS. They cover the control of materials, design development, and manufacturing process, including microbial controls, and ensure that the design and manufacturing process of a PFS is robust and yields a product that meets the quality standards. A detailed assessment of applicability of the requirements should be performed for the target product profile.

 © 2024 Parenteral Drug Association, Inc.

Licensed to Kuo, Li-Hung/TWi Pharmaceuticals Inc.: Copying and Distribution Prohibited.

Figure 5.4-1 Overview of Subrequirements of GSPRs 10, 11, 13, 14, and 15 Applicable to Prefilled Syringes

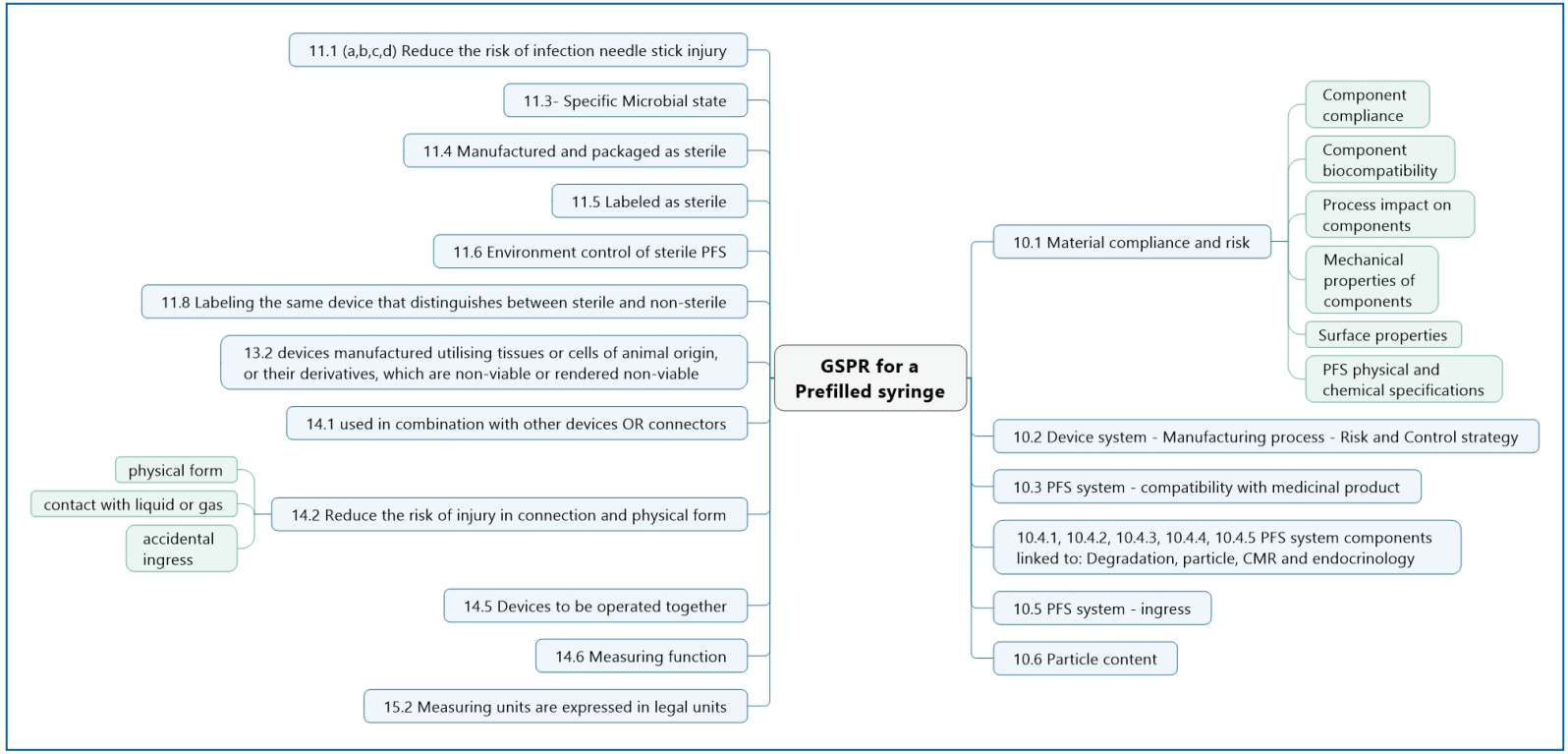

5.5 Nonapplicable GSPRs and Their Justifications

To avoid overloading this document, GSPRs that are not applicable to the DDC in scope of TR-73-2 have not been included. For all nonapplicable GSPRs, providing a rationale that justifies the decision is recommended. The following suggestions should facilitate development of a justification:

- If a requirement contains several subrequirements, make sure to justify which ones are nonapplicable
- Use wording that aligns with the wording of the requirement (same terminology)
- Be precise and keep it simple

Table 5.5-1 provides a few examples of justifications; it is not exhaustive and provides only suggestions for how these justifications may be phrased.

 © 2024 Parenteral Drug Association, Inc.

Licensed to Kuo, Li-Hung/TWi Pharmaceuticals Inc.: Copying and Distribution Prohibited.

Table 5.5-1 Nonapplicable GSPRs and Suggested Justifications

GSPR Number	GSPR Content	Justification of Nonapplicability
9	For the devices referred to in Annex XVI, the general safety requirements set out in Sections 1 and 8 shall be understood to mean that the device, when used under the conditions and for the purposes intended, does not present a risk at all or presents a risk that is no more than the maximum acceptable risk related to the product's use, which is consistent with a high level of protection for the safety and health of persons.	The device in scope is not referred to in Annex XVI (products without an intended medical purpose).
14.3	Devices shall be designed and manufactured in such a way as to minimize the risks of fire or explosion during normal use and in single fault condition. Particular attention shall be paid to devices the intended use of which includes exposure to or use in association with flammable or explosive substances or substances that could cause combustion.	The device in scope does not include electronic components and is not intended to be exposed to or used in association with flammable or explosive substances or substances that could cause combustion.
16 (incl. 16.1-16.4)	Protection against radiation	The device in scope does not emit radiation.
17 (incl. 17.1-17.4)	Electronic programmable systems — devices that incorporate electronic programmable systems and software that are devices in themselves	The device in scope does not incorporate electronic programmable systems and it is not software itself.
18 (incl. 18.1-18.8)	Active devices and devices connected to them	The product is not intended to be connected to or equipped with an energy source other than that generated by the human body for that purpose, or by gravity.
20.6	Accessible parts of devices (excluding the parts or areas intended to supply heat or reach given temperatures) and their surroundings shall not attain potentially dangerous temperatures under normal conditions of use.	The device is not an active medical device and does not heat.
21.1	Devices for supplying the patient with energy or substances shall be designed and constructed in such a way that the amount to be delivered can be set and maintained accurately enough to ensure the safety of the patient and of the user.	The device part does neither supply energy nor substances, as the term is used throughout MDR. [1] The device part does not have dose setting. One PFS is one dose.
21.2	Devices shall be fitted with the means of preventing and/or indicating any inadequacies in the amount of energy delivered or substances delivered that could pose a danger. Devices shall incorporate suitable means to prevent, as far as possible, the accidental release of dangerous levels of energy or substances from an energy and/or substance source.	The device part supplies neither energy nor substances, as the term is used throughout MDR.[1]
21.3	The function of the controls and indicators shall be clearly specified on the devices. Where a device bears instructions required for its operation or indicates operating or adjustment parameters by means of a visual system, such information shall be understandable to the user and, as appropriate, to the patient.	The device part does not have any controls or indicators specified on the label. [2]
23	Label and instructions for use — 23.1 "General requirements regarding the information supplied by the manufacturer"; 23.2 "Information on the label"; 23.3 "Information on the packaging which maintains the sterile condition of a device ('sterile packaging')"; 23.4 "Information in the instructions for use"	Labeling requirements for medical devices/device parts are overruled by EMA/37991/2019 (Rev.2; section 2.12) labelling requirements for medicinal products.
23.2 f	Information on the label — The label shall bear the following particulars: where applicable, information labeled in accordance with Section 10.4.5.	The device in scope does not contain product substances listed in MDR Annex I, 10.4.

[1] Immediate labeling is out of scope of this technical report (see **Section 1.2**) as the requirements are covered by Directive 2001/83/EC as the leading legal framework. However, relevant performance and safety input from design development activities of the device part on user-related labeling should be considered.

[2] Potential required visual inspection before use is specified in the IFU and provided in the application to CAs (see **Section 1.2**).

 © 2024 Parenteral Drug Association, Inc.

Licensed to Kuo, Li-Hung/TWi Pharmaceuticals Inc.: Copying and Distribution Prohibited.

6.0 References

1. European Commission. *Regulation (EU) 2017/745 of the European Parliament and of the Council of 5 April 2017 on Medical Devices, amending Directive 2001/83/EC, Regulation (EC) No 178/2002 and Regulation (EC) No 1223/2009 and repealing Council Directives 90/385/EEC and 93/42/EEC*; Document 32017R0745. OJ L 117: Brussels, 2017.

2. The European Association Medical devices of Notified Bodies. *Team-NB Position Paper on Documentation Requirements for Drug Device Combination Products Falling in the Scope of Article 117 of MDR 2017/745*; TEAM-NB.org: Sprimont, Belgium, 2020.

3. The European Association Medical devices of Notified Bodies. *Team-NB Position Paper: Best Practice Guidance for the Submission of Technical Documentation under Annex II and III of In Vitro Diagnostic Medical Devices Regulation*; Team-NB: Sprimont, Belgium, 2023.

4. European Commission. *Directive 2001/83/EC of the European Parliament and of the Council of 6 November 2001 on the Community Code Relating to Medicinal Products for Human Use*; OJ European Commission: Brussels, 2012.

5. European Medicines Agency. *Guideline on Quality Documentation for Medicinal Products when Used with a Medical Device*; EMA: London, 2019.

6. European Medicines Agency. Glossary of Regulatory Terms. About Us. https://www.ema.europa.eu/en/about-us/about-website/glossary (accessed 19 Jan 2024).

7. International Organization for Standardization. *ISO 10993-18:2020/Amd 1:2022: jBiological Evaluation of Medical Devices — Part 18: Chemical Characterization of Medical Device Materials within a Risk Management Process — Amendment 1: Determination of the Uncertainty Factor*; ISO: Geneva, 2020.

8. European Medicines Agency. Questions and Answers: Good Manufacturing Practice – Data Integrity. Guidance on good manufacturing practice and good distribution practice: Questions and answers. https://www.ema.europa.eu/en/human-regulatory-overview/research-and-development/compliance-research-and-development/good-manufacturing-practice/guidance-good-manufacturing-practice-and-good-distribution-practice-questions-and-answers (accessed 19 Jan 2024).

9. Parenteral Drug Association. *Technical Report No. 73: Prefilled Syringe User Requirements for Biotechnology Applications*; PDA: Bethesda, Md., 2015.

10. International Organization for Standardization. *ISO 11040-4:2015 Prefilled Syringes — Part 4: Glass Barrels for Injectables and Sterilized Subassembled Syringes Ready for Filling*; ISO: Geneva, 2015.

11. International Organization for Standardization. *ISO 14971:2019 Medical Devices — Application of Risk Management to Medical Devices*; ISO: Geneva, 2019.

12. Council of Europe. *European Pharmacopeia (Ph. Eur.), 11th Edition*. Council of Europe: Strasbourg, 2022.

13. International Organization for Standardization. *ISO 11040-6:2019 Prefilled Syringes — Part 6: Plastic Barrels for Injectables and Sterilized Subassembled Syringes Ready for Filling*; ISO: Geneva, 2019.

14. Medical Device Coordination Group. *Guidance on Standardisation for Medical Devices (MDCG-5)*; European Commission: 2021.

15. U.S. Food and Drug Administration. *Guidance for Industry: Data Integrity and Compliance with cGMP: Questions and Answers*; U.S. Department of Health and Human Services: Silver Spring, Md., 2018.

16. European Biopharmaceutical Enterprises and European Federation of Pharmaceutical Industries and Associations. *EBE-EFPIA Reflection Paper: Conformity with the relevant General Safety Performance Requirements listed in the European Medical Device Regulation 2017/745: Case Study for a Pre-*

 © 2024 Parenteral Drug Association, Inc.

Licensed to Kuo, Li-Hung/TWi Pharmaceuticals Inc.: Copying and Distribution Prohibited.

filled Pen (Prefilled Syringe Assembled with Autoinjector Parts forming a Single Integral Product Regulated as a Medicinal Product); EFPIA: Brussels, 2019.

17. European Biopharmaceutical Enterprises and European Federeation of Pharmaceutical Industries and Associations. *EBE-EFPIA Reflection Paper: An Industry Perspective on Article 117 of the EU Medical Devices Regulation and the Impact on how Medicines are Assessed*; EFPIA: Brussels, 2018.

18. Medical Device Coordination Group. *MDCG 2021-24: Guidance on Classification of Medical Devices*; European Commission: Strasbourg, 2021.

19. European Commission. *Guidelines Relating to the Application of the Council Directive 90/385/EEC on Active Implantable Medical Devices the Council Directive 93/42/Eec on Medical Devices: Medical Devices with a Measuring Function*; European Commission: Brussels, 1998.

20. The British Standards Institution. *BS EN 60601-1-2:2015+A1:2021 Medical Electrical Equipment General Requirements for Basic Safety and Essential Performance. Collateral Standard: Electromagnetic Disturbances. Requirements and Tests*; BSI: London, 2021.

21. The British Standards Institution. *BS EN 62366-1:2015+A1:2020 Medical Devices Application of Usability Engineering to Medical*; BSI: London, 2020.

22. International Organization for Standardization. *IEC/TR 62366-2:2016 Medical Devices — Part 2: Guidance on the Application of Usability Engineering to Medical Devices*; ISO: Geneva, 2016.

23. European Commission. *Note for Guidance on Minimising the Risk of Transmitting Animal Spongiform Encephalopathy Agents via Human and Veterinary Medicinal Products (EMA/410/01 rev.3)*; Official Journal of the European Union. Publications Office, European Union: Brussels, 2011.

 © 2024 Parenteral Drug Association, Inc.

Licensed to Kuo, Li-Hung/TWi Pharmaceuticals Inc.: Copying and Distribution Prohibited.

Terms of Usage for PDA Electronic Publications (Technical Reports, Books, etc.)

An **Authorized User** of this electronic publication is the purchaser.

Authorized Users are permitted to do the following:

- Search and view the content of the PDA Electronic Publication
- Download the PDA Electronic Publication for the individual use of an Authorized User
- Print the PDA Electronic Publication for the individual use of an Authorized User
- Make a reasonable number of photocopies of a printed PDA Electronic Publication for the individual use of an Authorized User

Authorized Users are not permitted to do the following:

- Allow anyone other than an Authorized User to use or access the PDA Electronic Publication
- Display or otherwise make any information from the PDA Electronic Publication available to anyone other than an Authorized User
- Post the PDA Electronic Publication or portions of the PDA Electronic Publication on websites, either available on the Internet or an Intranet, or in any form of online publications without a license from PDA, Inc.
- Transmit electronically, via e-mail or any other file transfer protocols, any portion of the PDA Electronic Publication
- Create a searchable archive of any portion of the PDA Electronic Publication
- Use robots or intelligent agents to access, search and/or systematically download any portion of the PDA Electronic Publication
- Sell, re-sell, rent, lease, license, sublicense, assign or otherwise transfer the use of the PDA Electronic Publication or its content
- Use or copy the PDA Electronic Publication for document delivery, fee-for-service use, or bulk reproduction or distribution of materials in any form, or any substantially similar commercial purpose
- Alter, modify, repackage or adapt any portion of the PDA Electronic Publication
- Make any edits or derivative works with respect to any portion of the PDA Electronic Publication including any text or graphics
- Delete or remove in any form or format, including on a printed article or photocopy, any copyright information or notice contained in the PDA Electronic Publication
- Combine any portion of the PDA Electronic Publication with any other material

To License or purchase Reprints

- **Licensing:** Site licenses and licenses to distribute PDA Electronic Publication can be obtained for a fee.
  To learn more about licensing options and rates, please contact:
  Whitney Alexis, Publications Manager, +1 (301) 656-5900.
  Written correspondence can be sent to: PDA, Inc. Attn: Whitney Alexis, 4350 East West Highway, Suite 150, Bethesda, MD 20814.
- **Reprints:** Reprints of PDA Electronic Publication can be purchased for a fee.
  To order reprints, please contact:
  Whitney Alexis, Publications Manager, +1 (301) 656-5900.

Written correspondence can be sent to: PDA, Inc. Attn: Whitney Alexis, 4350 East West Highway, Suite 150, Bethesda, MD 20814.

© 2024 Parenteral Drug Association, Inc.

Licensed to Kuo, Li-Hung/TWi Pharmaceuticals Inc.: Copying and Distribution Prohibited.

Application of Medical Device Regulation Annex I Requirements for Staked Needle Syringes

About PDA Technical Reports

PDA Technical Reports are global consensus documents, prepared by member-driven Task Forces (listed on inside front cover) comprised of content experts, including scientists and engineers working in the pharmaceutical/biopharmaceutical industry, regulatory authorities and academia. While in development, PDA Technical Reports are subjected to a global review of PDA members and other topic-specific experts, often including regulatory officials.

Comments from the global review are then considered by the authoring Task Force during the preparation of the final working draft. The level of expertise of the Task Force and those participating in the global review ensure a broad perspective reflecting best thinking and practices currently available.

The final working draft is next reviewed by the PDA Advisory Board or Boards that sanctioned the project. PDA's Advisory Boards are: Science Advisory Board, Advanced Therapy Medicinal Products Advisory Board, Biopharmaceutical Advisory Board, and Regulatory Affairs and Quality Advisory Board. Following this stage of review, the PDA Board of Directors conducts the final review and determines whether or not to publish the document as an official PDA Technical Report.

While PDA goes to great lengths to ensure each Technical Report is of the highest quality, all readers are encouraged to contact PDA about any scientific, technical, or regulatory inaccuracies, discrepancies, or mistakes that might be found in any of the documents. Readers can email PDA at: TRfeedback@pda.org.

Sanctioning Advisory Board: RAQAB

Denyse Baker, *Eli Lilly and Company Limited, (Chair)*
Eva Urban, *CSL Behring AG, (Vice-Chair)*
Anette Yan Marcussen, *NNE A/S, (Past-Chair)*
Masahiro Akimoto, *Heartseed Inc.*
Lisa Benette, *SeerPharma*
Chuck Bornhoeft, *Rion*
Marcello Colao, *GSK Vaccines*
Rosane Cuber, *Bio-Manguinhos/FIOCRUZ*
Karolyn Gale, *Emergent BioSolutions, Inc.*
Kir Henrici, *The Henrici Group, LLC*
Dinesh Khokal, *Amgen, Inc.*
Beth Kirschenheiter, *Bristol Myers Squibb*
Amanda McFarland, *ValSource, Inc.*
Catriona Murphy, *Eli Lilly and Company Limited*
Ajay Pazhayattil, *Capcium Inc.*
Vishal Sharma, *Vienni Training and Consulting LLP*
Michele Simone, *Bracco*
Jacqueline Veivia-Panter, *Biocentriq*
Vudathala, Gopi, Incyte
Kelly Waldron, *ValSource*

PDA Officers and Directors

Officers

Chair: Anil Sawant, PhD, *Merck & Co./Merck*
Chair-Elect: Melissa Seymour, *Biogen, Inc.*
Secretary: Bettine Boltres, PhD, *West Pharmaceutical Services*
Treasurer: Emma Ramnarine, *Genentech/Roche*
Immediate Past-Chair: Susan Schniepp, *RCA*
President: Glenn Wright

Directors

Lisa Bennett, *Seer Pharma*
Christiana Campa, PhD, *GSK*
Andrew Chang, PhD, *Novo Nordisk, Inc.*
Cylia Chen, MA, *Amgen*
Mirko Gabriele, PhD, *Thermo Fisher Scientific*
Marc Gloglovsky, *ValSource Inc.*
Andrew Hopkins, *Abbvie*
Stephan O. Krause, PhD, *Bristol Myers Squibb*
Ivy Louis, *VIENNI Training & Consulting LLP*
Amy McDaniel, *BMS*
Brigitte Reutter-Haerle, *Vetter Pharma International GmbH*
Osamu Shirokizawa, *Life Scientia, Ltd.*

PDA Publication Production and Editing

Josh Eaton, *Sr. Director, Scientific & Regulatory Affairs*
Walter Morris, *Senior Director of Publishing and Press Relations*
Katja Yount, *Publication Designer*
Marilyn Foster, *Technical Editor/Writer*

Licensed to Kuo, Li-Hung/TWi Pharmaceuticals Inc.: Copying and Distribution Prohibited.

PDA®
Parenteral Drug Association

Bethesda Towers
4350 East West Highway
Suite 600
Bethesda, MD 20814 USA
Tel: +1 (301) 656-5900
Fax: +1 (301) 986-0296
E-mail: info@pda.org
Web site: www.pda.org